Machine Wiring Schematic, 1606-E93 Engine

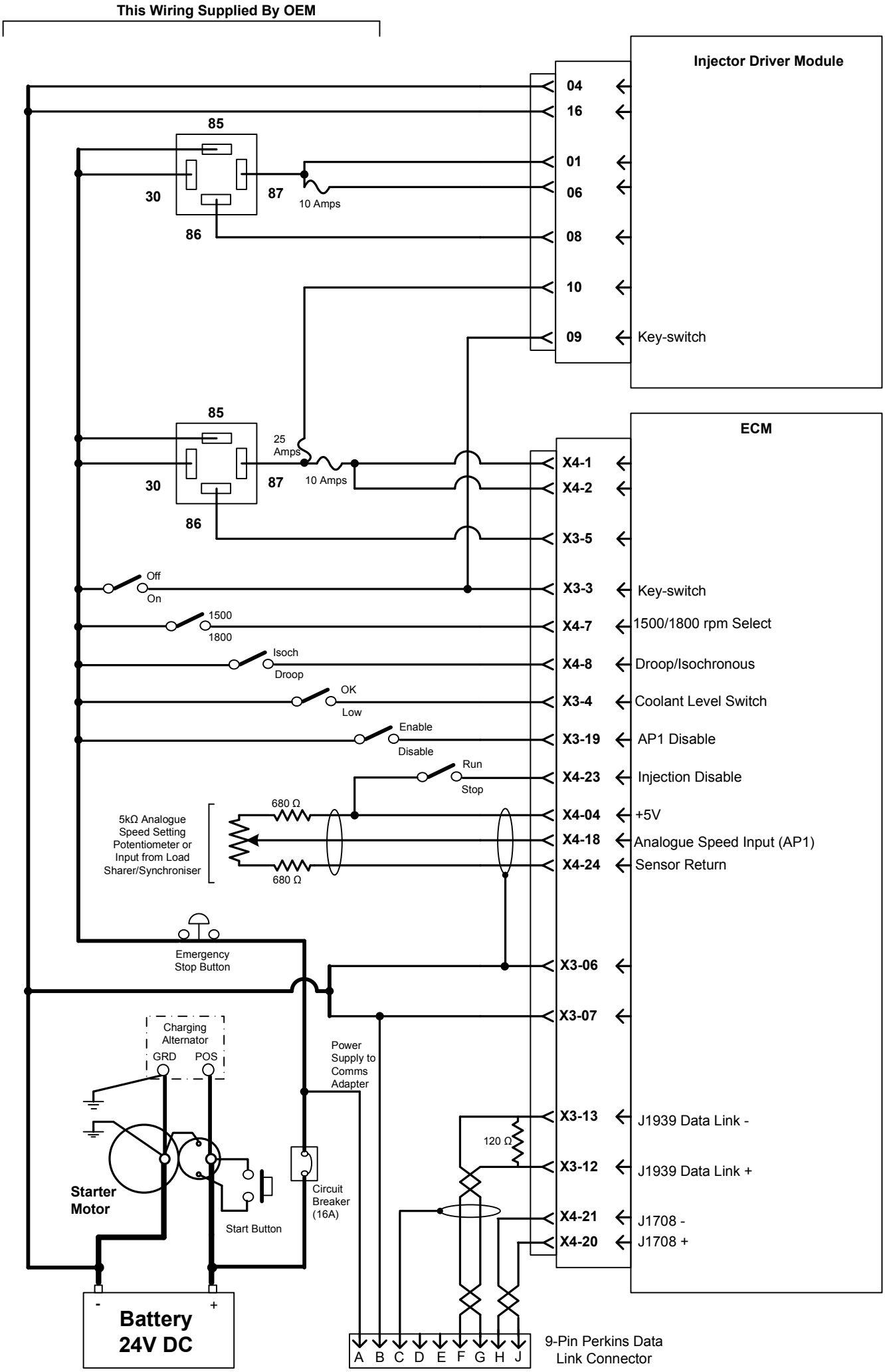

1606_Machine-Wiring-Schematic.vsd